Signal Conditioning & Isolation

Technical Tutorial

Action Instruments (now Eurotherm) pioneered the electronic signal conditioning industry. Action was also the first to develop field configurable signal conditioners, which allow the user to set jumpers or DIP switches to adjust the gain and offset of the device. Advancements in microprocessor technology have made the circuitry highly reliable and is utilized in all new designs. Many of Action's currently active, field configurable instruments incorporate Application Specific Integrated Circuit (ASIC) technology for higher density and high reliability. ASIC technology was king in its day.

Wide Ranging refers to the adjustment capability of an instrument within each of the field configurable ranges. This means that once DIP switches are set the user can use potentiometers or push buttons to make 50% to 90% adjustment of the gain and offset. Combining wide-ranging adjustments with field configuration gives the Instrumentation or Control Engineer complete flexibility to accommodate virtually any input to output signal conversion.

DEFINITION OF SIGNAL CONDITIONING

Signal Conditioners are electronic instruments used in factory or machine automation, to convert sensor or transducer measurement signal levels to industry standard control signals. Industry standard control signals provide computer and control system manufacturers a common communication method to effectively receive and transmit measurement and control data. Examples of measurement data include temperature or AC/DC voltage/current signals from various transducers. Examples of control data include on/off signals for a heating element or proportional signals for a valve actuator.

COMMON INPUT SIGNALS TO SIGNAL CONDITIONERS

There are many thousands of types of sensors or transducers used for very general or very specific measurement requirements. Since Signal Conditioners are used to enable process automation, most of the signals measured are produced by sensors and are electrical in nature. Sensor elements for automation usually provide an electrical output or a way of measuring changes in the sensor's electrical properties.

Model Q498

Usually an electrical reference or excitation source is required for sensors whose electrical properties are measured. As an example a very common temperature sensor is a Resistive Temperature Detector (RTD). Since the resistance of an RTD changes with temperature, a constant DC current excitation source is used as a reference to produce a proportionally changing voltage [Ohm's Law: Voltage = Current (I) x Resistance (R)]. Thus a Signal Conditioner which measures an RTD input provides a current reference as excitation and measures the voltage produced.

TYPES OF SENSORS & INPUTS

There are nine common sensor signal input types:

Sensor/Input	Types	Signal Measured (excitation)	Application
Thermocouples	B, C, E, J, K, N, R, S, or T type	Millivolts DC	Temperature measurement
RTD	Pt100, Pt200, Pt500, Pt1000, Cu10, Ni120	Resistance (DC current)	Temperature measurement
DC Current	4-20mA, 1-5A, 0-100microA, 0-1mA, 1-5mA	Amps DC (24V DC)	Standard control signals or transducer outputs
DC Voltage	1-5V, 0-10V, +/-5V, +/-10V, 0-100V, 0-500V	Volts DC	Standard control signals or transducer outputs
Strain Gage / Bridge	0-10mV, 0-20mV, 0-30mV, +/-10mV, +/-50mV,	Millivolts DC (5-10V DC)	Weight, pressure, stress, compression
Potentiometer	0-100Ohm, 0-500Ohm, 0-1000Ohm, 0-10KOhm	Resistance (DC voltage)	Setpoint adjust, position feedback, tank level
Frequency/Pulse	Sin wave, square wave, triangle wave or pulse spike	mV or V DC (5V, 12V, 24V DC)	Proximity sensor conversion for rate, speed, flow and accumulation
AC Current	0-100mA, 0-1A, 0-5A	Amps AC	Power or load measurement
AC Voltage	0-500mV, 0-24V, 0-120VAC	Volts AC	Power or load measurement

STANDARD OUTPUT SIGNALS

First 10-50mA, then 4-20mA became the industry standard signal for process control. The primary advantages of a 4-20mA signal is the "live zero" which refers to the 4mA minimum (0% of full scale) and the fact that current signals have a high immunity to induced noise. The live zero is an advantage in the case where signal wires might be damaged. If there were an open circuit no current would flow (e.g. 0mA or -25% of full scale) and an operator would be sure to recognize a problem; versus the case where a 0-10V signal is used and an open circuit would produce 0V (or an indeterminate value) which might be mistaken for 0% of full scale.

Regarding noise, the physical principals of electromagnetics prove that voltage signals and high impedance voltage input instruments are much more susceptible to noise generated by radio transmitters or electric motors and power lines than current signals and their low input impedance instruments. Other popular signal levels are 1-5V and 2-10V which are the result of 4-20mA current signals and 250Ohm and 500Ohm load resistors, respectively.

RELAY OUTPUTS

Relay outputs are also common in control systems. They are used to apply power (120VAC) to motors, lights, pumps, horns, conveyors and other devices. In some cases relays are used to produce a count and will switch DC power (12V or 24VDC) to represent flow rates, or maybe the number of cans sealed on a canning line. Solid State Relays are used for fast switching and where high reliability is required since they have no mechanical delays or wear. Solid state relays often operate at transistor-to-transistor logic (TTL) levels of 5VDC and are available for higher levels of AC and DC power.

GROUNDING, SIGNAL REFERENCES AND GROUND LOOPS

Measuring process variables such as temperature, pressure and flow are very common in today's industrial applications. Sensor and transducer manufacturers provide the technical specifications required to use or interface their devices to a wide variety of control and measurement systems. However, signal grounding and electrical references are often not mentioned in manufacturer's application notes or overlooked in system design. This oversight can led to significant problems and the need for signal ground isolation.

A signal reference is the relative ground potential (or ground voltage) at the point of measurement. Theoretically every point has a different ground potential determined by the charge density of the surrounding environment. For example if you have ever been shocked when touching a door knob after walking across a carpet, you have felt the discharge of your relative ground potential to that of the door's.

In industrial applications two different grounds may be inadvertently connected together; one at the point of measurement (the sensor) and the other at the point of control (computer or control room). Since these two grounds are typically wired together you don't get the same spark seen the instant you touch the door knob. Instead there is a small "ground current" that may flow from the higher ground potential to the lower. This current will produce signal errors and the cause is commonly referred to as a "Ground Loop". The Ground Loop refers to the circular conducting path that exist between the two points (sensor and control room); the "earth ground" conducts through moisture and the minerals in the soil while the signal wires conduct for the other half of the loop. Connecting the signal wire completes a loop between the earth and the two points.

An example might be that a pressure sensor on a tank, in a tank farm (fluid storage facility), measures the half full level of the fluid in that tank. A control room operator monitors all the levels of the tanks spread out over several acres on the tank farm. The pressure sensors are grounded to the tanks and the power system of the control room is grounded for the safety of the operator. One day a thunder storm blows over the tank farm and a large thunderhead (cloud) passes over the tank. The electrical charge of the thunderhead raises the ground potential of the earth and tank below. The result is a very significant differential in ground potentials between the tank and the control room and because the two grounded points are connected together a large error current flows down the wire to the control room and the instrument monitoring the tank level may read a full tank of fluid due to the erroneous ground current.

ISOLATORS AND ISOLATION OF SIGNAL GROUNDS

If the explanation of ground potentials and ground loops is not totally clear don't worry. All that needs to be known when developing or checking a control system is where the grounds are located. If there are two devices or sensors that are grounded, then a signal ground isolator will be required to ensure signal integrity.

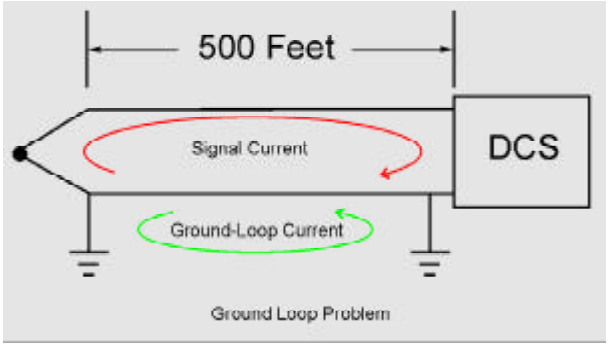

Figure 1

A signal ground isolator (or Isolator) provides a "floating" ground reference at the input and output of the device. This means that neither the input nor the output circuits are connected to ground. Typically an isolator has a power transformer where the primary side of the transformer, which accepts the main power, is electrically isolated from the dual secondary side which provides power to the input and output circuitry. The input and output circuitry will be isolated from each other with an optical isolator chip or another isolation transformer. High quality optical isolators and transformers are typically rated to provide several hundred to several thousand volts of isolation. These types of isolators are called three way isolators because they isolate input from output, input from power and output from power.

Another example of grounding sensors and isolation can be considered in the case of a common industrial boiler used for steam heat and power generation. In this example several thermocouple sensors are embedded or even braised to the boiler vessel, which is typically made of steel. This is done to ensure maximum thermal conductivity between the vessel and the thermocouple sensor. Also grounding thermocouples at the point of measurement reduces signal errors due to electromagnetic interference or radio frequency noise, which can be induced on the thermocouple wires from motors or walky-talkies.

In this example, if the boiler controller shares the same (good steel) ground as the thermocouples in the vessel then a control engineer might get away with not using signal isolators to separate each grounded thermocouple because the good conducting steel vessel acts as one large ground point. However, there will always be a chance of ground currents and errors in the system if each of the thermocouples is not isolated from the others. Additionally, if the system has a remote steam trap for heat transfer and more grounded thermocouples at that point, and they are connected back to the boiler controller, then the probability for having grounding problems will be very high. This is actually a very common occurrence, where one portion of a system works well until another portion is connected. To prevent problems such as this, Eurotherm manufactures only isolating thermocouple signal conditioners.

TYPES OF SIGNAL CONDITIONERS OR ISOLATING TRANSMITTERS

Signal Conditioners can amplify, convert, boost, transform, buffer, filter, alarm and isolate process control signals. There seems to be no limit to the variety of things control engineers want to do *to* or *with* control signals. Signal conditioners go by many names; converters, transducers, isolators, transmitters, widgets and black boxes. Conventionally most signal conditioners and signal isolators fall into three category types, based on the number of wires required for power and signal. The three types are referred to as four-wire, three-wire and two-wire transmitters.

FOUR-WIRE TRANSMITTER

A four-wire transmitter has two-wires for power and two-wires for the signal output. A four-wire transmitter can be either AC or DC powered, typically 120VAC, 240VAC or 12VDC, 24VDC. In most cases the power supplies are transformer isolated to ensure that ground faults are not introduced through the power circuit. Sometimes manufacturers provide a wide-ranging power supply which is typically jumper selectable for AC power or the DC power supplies will operate through a range greater than 12V to 24VDC (e.g. 9 to 30VDC). Four-wire transmitters provide a powered output, either a voltage signal (e.g. 0-10V, 1-5V), or a current signal (e.g. 4-20mA, 10-50mA) and in some cases a relay (e.g. solid state or contact closure).

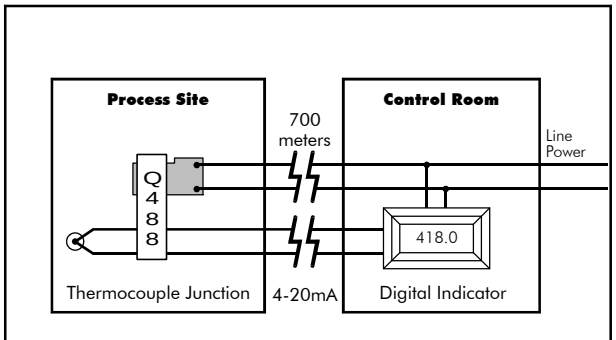

Figure 2

Four-wire transmitters are popular because they are complete. Since they have their own power supply they do not use power from the input or output signal lines. The power supply also allows four-wire transmitters to power their output signal. Therefore four-wire transmitters are often used to boost signals for retransmission. This makes the four-wire transmitter a popular solution to improve signal drive to other instruments on the output.

Four-wire transmitters are typically isolated from power and many models are optically isolated between the input and output circuit.

TWO-WIRE TRANSMITTER

A two-wire transmitter has two-wires for both power and the output signal. A two-wire transmitter is always DC powered and the output can only be a current signal, typically 4-20mA, and in older systems 10-50mA. The two-wire transmitter is considered a field device and requires very little power (i.e. milliwatts). Therefore it is appropriate for hazardous environments (explosive) such as chemical refineries and pharmaceutical plants. In this example the advantage of the low DC power requirement, which ranges from 10 to 48VDC at currents as low as 4mA, reduces the chances of an electrical spark causing ignition of flammable vapors. Additionally two-wire transmitters save on wire costs since both the signal and power are on the same wires. Locating a two-wire transmitter as far away as 2000 feet from the control room is possible and at half the wiring cost of a four-wire transmitter.

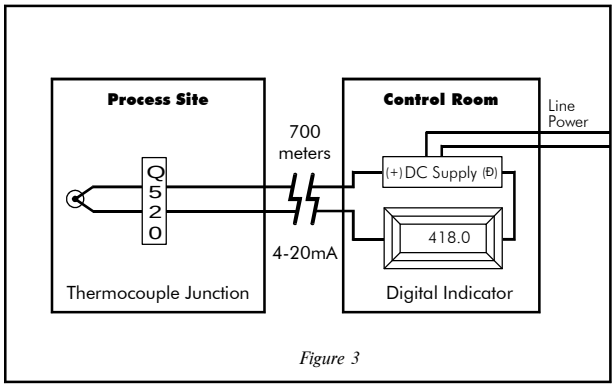

Figure 3

Since a two-wire transmitter's signal is a regulated current from a DC power supply, it's ability to provide a signal to other devices depends on the size of the power supply. For example if the two-wire transmitter has a 12V minimum power requirement and a 24VDC power supply is used to power the transmitters output current loop, which results in 12 volts of remaining loop drive available (e.g. 24V power supply - 12V transmitter = 12V remain for other devices). The maximum load or resistance that can be added to this loop is 12V divided by 20mA (maximum signal) or 600Ohms. So if two other instruments, maybe an indicator and chart recorder, were to be installed in the loop and their input impedance was 250Ohms then this would use all but 2V (100Ohms) of the loop drive. To increase the loop drive, a 36VDC power supply could be used, permitting more instruments to be added to the loop.

Two-wire transmitters may be isolated from input to output, incorporating either an isolation transformer or an optical isolator. Many low cost two-wire transmitters are not isolated, which makes it important to ensure that the input sensor is not grounded.

THREE-WIRE TRANSMITTERS

Three-wire transmitters are a blend of the four and two-wire versions. The three-wire transmitter uses two-wires for power and the third wire is used for the signal (+) positive terminal. The power (-) negative terminal is used as a common reference for power and the signal (-) negative reference. This allows the best of both transmitters features to be utilized. There is one less wire required than a four-wire transmitter and powered outputs are provided for both 4-20mA signals and 0-10V signals. These transmitters can be lower in cost than four-wire transmitters because they are DC powered and do not incorporate an isolating power supply. However, due this cost saving technique, designers must be aware of grounding especially since several transmitters are usually connected to one power supply, and the negative (-) terminal is common to all signals.

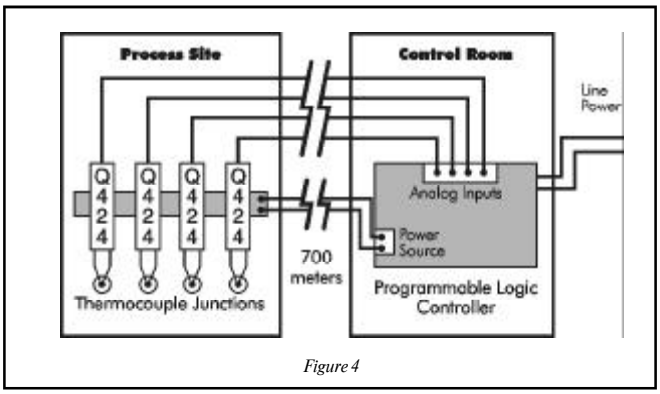

Figure 4

Three-wire transmitters may be isolated from input to output incorporating either an isolated transformer or an optical isolator.

LIMIT ALARM TRIPS

Limit Alarms are considered a type of four-wire transmitter since they have two-wires for power and at least two-wires for the relay signal output. Limit Alarms, or Limit Trips as they are sometimes called, are very similar to a thermostat or the temperature controller of your heater or air conditioner in your office building or home. A limit alarm has a setpoint which is used as a reference against a process variable. On your thermostat at home you may have the temperature set for a cozy 72°F or 23°C. If the room temperature gets below that "setpoint" level then the heater will turn on. This is an example of on/off control. A limit alarm does the same thing, however it is used in many more applications than just on/off control. One of the most popular uses for limit alarms is safety back up systems. If a temperature gets too high the limit alarm might light a control panel annunciator to alert a control room operator. Or if a pressure level gets too high or coolant level too low the limit alarm could use it's relay output to turn on a horn, indicating a dangerous condition. Other applications include secondary control back-up, where if a computer controlling a system locked up and could do nothing, the secondary signal monitors (i.e. limit alarms) would trip and begin a controlled shut down process to prevent damage and other hazards.

DIGITAL INDICATORS

Digital Indicators or Panel Meters are another type of electronic instrument that accepts direct sensor inputs. For the most part, AC powered indicators can be considered a four-wire transmitter if they are configured with an analog or relay output. Indicators are most commonly used to display process variables however some have secondary functions such as a 4-20mA transmitter output, limit alarm, or relay contact closure output. It is important to note whether or not the transmitter output is isolated. These four-wire type indicators typically utilize bright, light emitting diodes (LEDs) for the display digits.

Models V116, V132 and V408

Another important type of Digital Indicator is known as a loop powered indicator. These indicators were designed for field (outdoor) use and have operating characteristics similar to two-wire transmitters. Like two-wire transmitters they use a 4-20mA signal for power. Therefore, they are very low power devices which are ideal for hazardous environments. They typically use a liquid crystal display (LCD) for indication and are very easy to use since they can easily be included into a 4-20mA loop, requiring only a few volts (1 to 4V) of loop drive.

ASIC RELIABILITY

An Application Specific Integrated Circuit (ASIC) is a custom integrated circuit designed to perform specific functions. Action Instruments has designed several ASIC devices because they offered superior performance at the lowest possible cost. Action supports all our ASIC products with a lifetime warranty due to the high reliability of these integrated circuits. Microprocessor technology has become so much more reliable that current designs are utilizing this technology and still offering a lifetime warranty.

TOUCHCAL™ TECHNOLOGY

TouchCal technology is a unique calibration technique, which takes the place of trim potentiometers. Over the years Action has constantly fought quality issues related to potentiometers. Potentiometers have always been in the top five ranking of failure prone parts due to their mechanical nature. Additionally, sound instrumentation design relies heavily on high accuracy components with low thermal drift; two characteristics not usually associated with potentiometers.

TouchCal technology utilizes a push button instead of zero and span potentiometers. The user simply inputs the maximum signal and touches the button to store that value. The minimum range is done in the same way, being stored in non-volatile memory. The net result is faster non-interactive zero and span calibration with improved reliability and stability. All new Action products incorporate TouchCal and microprocessor technology whenever possible.

INSTANT ACCURACY™ TECHNOLOGY

Instant Accuracy is a patented cold junction compensation technique for high accuracy thermocouple temperature measurement. Instant Accuracy is based on thermal conductivity, the real time measurement of thermal gradients and compensation of changing gradients during instrument operation. Basically, by knowing the thermal conductivity between two temperature sensors on the printed circuit board and the thermal conductivity to the terminal and thermocouple junction, the measured heat flow provides a very accurate reference to calculate the actual terminal temperature. The result is extremely accurate cold junction compensation. The most impressive characteristic is that Instant Accuracy is virtually immune to changes in ambient temperature or thermal changes during warm up. These two effects are directly responsible for a significant portion of reported calibration errors and signal errors.

WHY DO YOU NEED INSTANT ACCURACY?

Instant Accuracy – if you want to be sure you're making and transmitting accurate temp-erature measurements using thermocouples in an industrial environment, you need it. Instant Accuracy uses a patented dual sensing technique coupled with a circuit board designed to minimize the adverse affects of thermal inertia at the reference junction circuit. It virtually eliminates dangerous errors resulting from the slow response of normal reference junction circuits to changes in temperature. The kind of ambient temperature changes that occur when a maintenance engineer opens a temperature controlled instrument cabinet on a hot day. Or when someone opens a door near your instrumentation on a cold day. Without Instant Accuracy, these everyday occurrences can cause process measurement errors that will result in quality inconsistencies or product waste in your production. The most impressive characteristic is that Instant Accuracy is virtually immune to changes in ambient temperature or thermal changes during warm up. These two effects are directly responsible for a significant portion of reported calibration errors and signal errors.

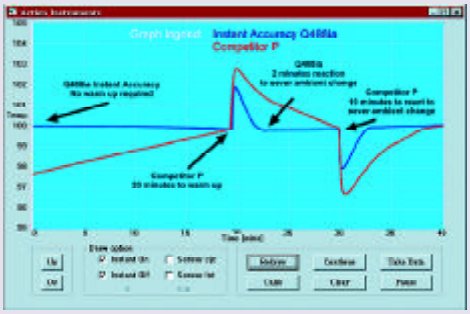

FIXED RANGE, NON-STANDARD AND SPECIAL RANGES

Some signal conditioner modules are defined as Fixed Range. Fixed Range modules are not wide ranging or field configurable. What this means is that the user typically specifies the input to output relationship (e.g. 0-10V/4-20mA) and the signal conditioner is built to provide that conversion, with +/- 5% zero and span adjustability. The advantage of fixed range modules is that they can be designed for very specific ranges and accuracies. For example, a temperature application may require a very small input range (e.g. 0-50°F) for a RTD input. Since wide-ranging field configurable devices are capable of providing ranges for a one thousand degree span, their accuracy tends to diminish, as the range gets smaller. Fixed range modules can be designed to handle these ranges and maintain accuracies of 0.1% of full scale. The only drawback of fixed range signal conditioners is that they are not necessarily an "off the shelf" solution, like the wide-ranging field configurable models.

Occasionally customers request non-standard ranges (e.g. a range other than those standard ranges listed on a fixed range modules' data sheet). These are becoming less common since the wide-ranging field configurable models can now accommodate most ranges with their 90% zero and span adjustments (see TouchCal Technology). In some applications customers will request a "special" range which is defined as a range that is beyond the standard or non-standard modules capabilities, requiring changes to the product's published specifications. In these "special' cases Action will approve a special range and advise the customer of the specification changes in advance. It should be understood that non-standard and special ranges are built to order and not considered an in-stock item. Price and availability need to be confirmed before ordering.

AGENCY APPROVALS

Eurotherm understands the importance of agency approvals. All new Eurotherm products are designed to meet, as a minimum, Canadian Standards Association (CSA), Underwriter's Laboratories (UL) and Conformite' Europeenne (CE) Mark requirements. Many two-wire transmitters and loop-powered indicators are submitted for hazardous approval ratings with Factory Mutual (FM), CENELEC (European Committee for Electrotechnical Standardization), and CSA. All Safety Agency approvals are listed on each product data sheet at the end of the Specifications Sections.

SPECIFYING A SIGNAL CONDITIONER

When specifying a signal conditioner, like any other product, redundancy ensures accuracy. Listing the model number and a brief description will ensure ordering accuracy, more so than just providing a model number.

Eurotherm has two basic types of products: fixed range and field configurable.

Specifying a fixed range module is relatively straightforward. Each data sheet provides clear Ordering Instructions after the Specification section, which should be followed. When ordering a fixed range module, specify:

Model #: Q403
Description: DC Input Signal Conditioner
Input: 0-10V
Output: 4-20mA
Power: 120VAC (If power options are available.)

In many cases, products, like the one above, have a suffix to the model number which defines the input and output range (Q403-1L08). The complete model number can be used when ordering (if you have the number), however, including the Description, Input, Output and Power requirements is mandatory to ensure order accuracy.

Specifying a wide-ranging, field configurable module is relatively easy since one module handles most ranges and power options. Typically, referring to the order guide at the back of the data sheet, the specifying engineer only needs to list the following:

Model #: WV408
Description: DC Input Isolator
Power: 9-30VDC

Note, in the case of wide ranging, field configurable modules the suffix to the model number typically refers to the revision level of the product and not any specific I/O range like in the case of a fixed range module. Thus the WV408-0000 is the complete model dash number, which can be used; however the main model number (WV408) and a description is adequate.

CALIBRATION

Calibration of Eurotherm products is defined in each product's data sheet or installation document. Step by step procedures are provided which detail all-important aspects of each module. As stated at the end of each calibration procedure in the data sheet, if their are any questions or concerns regarding the products use, configuration or calibration, please contact our Technical Service Team at 800-767-5726, or 858-279-5726.

Many Eurotherm products are extremely flexible and capable of a wide variety of signal conversion combinations. Many customers can appreciate this flexibility; however, they may also need pre-configured or pre-calibrated products to be drop shipped to a contractor at a job site. For this reason Eurotherm provides custom product configuration and calibration, model C620.

All calibration performed at Eurotherm utilizes test equipment that is traceable to the standards of the National Institute of Standards and Technology (NIST).

WHAT'S NEXT?

To see the complete selection of Action Instruments brand signal conditioners, limit alarms, remote data acquisition systems, control systems and display indicators, go to **www.eurotherm.com** and select Industrial I/O and Signal Conditioners. The complete array of products is presented along with data sheets and other application notes. If you have any further questions, do not hesitate to contact our Technical Service Team at

800-767-5726 OR 858-279-5726.

invensys EUROTHERM
8601 Aero Drive, San Diego, CA 92123
Tel:(800)767-5726 Fax:(858) 279-6290
e-mail:sales@actionio.com
www.actionio.com
www.eurotherm.com

An Invensys company